FWA-6173

2U Rackmount Network Appliance with Dual Intel® Xeon® 6 Processors for Gateway and NGFW

Features

- Up to 86 P-cores & 144 E-cores per socket with overall cores x frequency improvement for dynamic network processing
- Up to 16 DDR5 RDIMM memory with increased speed to boost computing capability
- Expandable Ethernet capability via Advantech Network Mezzanine Card (NMC) with up to 200GbE bandwidth per slot
- High availability system with redundant design such as PSU, fan, storage, BIOS, and BMC solutions
- Advantech IPMI 2.0 platform management with Redfish compliance

Specifications

System P/N		FWA-6173-00A1R
Form Factor		2U Rack Mount
Processor System	Processor	Intel® Xeon® 6 Processors
	Core Count	Up to 86 P-cores and 144 E-cores
	Base Frequency	Up to 3.9 GHz
	Chipset	NA
	BIOS	AMI UEFI
Virtualization		Intel® VT-Redirect Protection, Intel® S-IOV
Memory	Technology	DDR5, up to 6400 MT/s and 8000 MT/s (MCR DIMM from GNR-SP)
	Max. Capacity	1024 GB (64 GB per slot)
	Socket	16 x 288-pin DIMM
	ECC Support	RDIMM
Networking	Controller	2 x Intel i210
	1GbE	2 x 1GbE RJ45
Expansion Slot	PCIe x16	1 x PCIe Gen5 x16 double-deck 10.5" or 2 x PCIe Gen5/Gen4 x16 FH/HL
	NMC	8 x PCIe Gen5 x8
IPMI		IPMI 2.0 and Redfish compliant
Storage	2.5" Bay	2 x External 2.5" HDD/SSD
	M.2	2 x M.2 2280 M-Key for SATA SSD or PCIe Gen3 x4 NVMe 1 x M.2 2280 M-Key SATA Only
I/O	Console	1 x RJ45 type console
	USB	2 x USB 3.0
	LED Indicator	1 x Power LED, 1 x Alert LED, 1 x Locate LED, 1 x Software-defined LED
	Display	1 x VGA port
	Button	1 x Power button, 1 x Software-defined button
	Others	1x dedicated 1GbE LAN for IPMI
TPM		TPM 2.0
LCD Module		16 x 2 graphic display, 5 buttons
Power Supply	Power Type	AC Redundant CRPS (Option: DC Redundant CRPS)
	Watts	1600 W
	Input	AC: 100-127V/200-240V, 11A/9.6A, 50/60Hz (Option: DC -48V)
	Connector	AC 3pin plug
Environment	Operating Temperature	0 ~ 40 °C (32 ~ 104 °F)
	Non-operating Temperature	-40 ~ 70 °C (-40 ~ 158 °F), 60 °C@95% Non-Condensing Humidity
	Vibration Resistance (Operation)	5-500 Hz, 0.3 Grms, 3 axes, 1 hr/per axis
	Shock Protection (Operation)	10 G, 11 ms
Cooling		4 x Hot swap 8038 mm fan
Mechanical	Metallic Material	SGCC
	Mounting	Rackmount
	Dimensions (W x H x D)	438 x 88 x 600 mm (17.2" x 3.4" x 23.6")
	Weight (G.W.)	23.5 kg (51.8 lbs)
OS Support		Linux (CentOS, Red Hat, Ubuntu, Fedora)
Advantech S/W Packages		1. ALBPCU 2. APOECU 3. ipmitool 4. Server iManager (Linux base) - Health Guard - Diagnostic Framework - Network device identifier (NDI) 5. Quick Start Linux Image
Certification	EMC/Safety	CE, FCC, CB, UL, CCC

https://advavee.com

Dimensions

Unit: mm

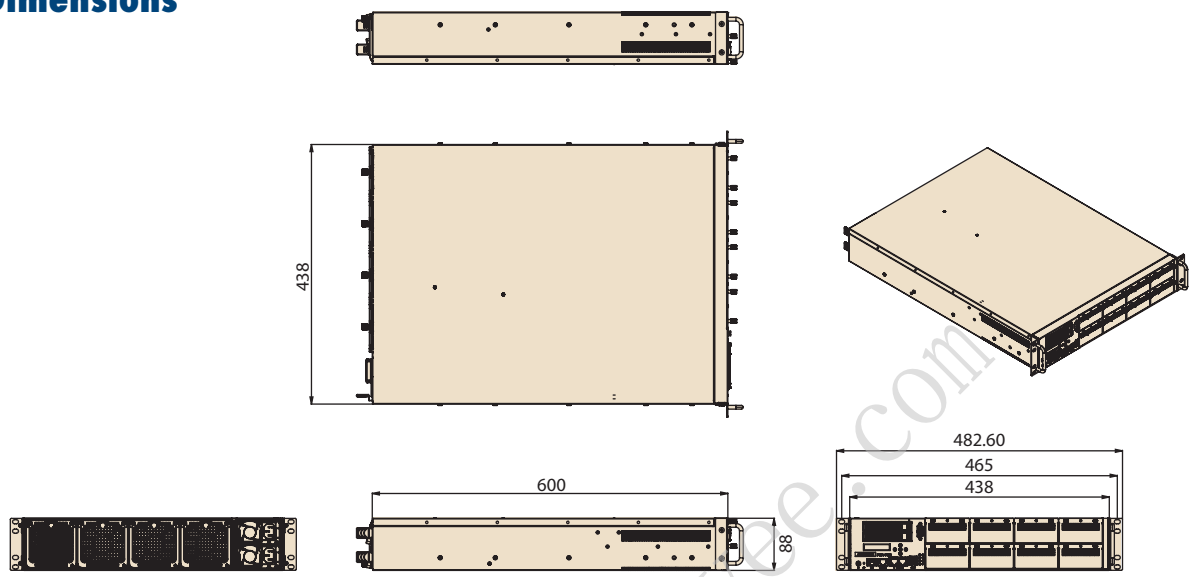

Front Panel External I/O Mechanical Layout/Drawing

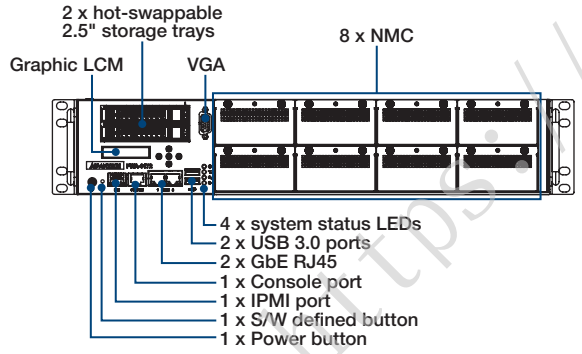

Rear Panel External I/O Mechanical Layout/Drawing

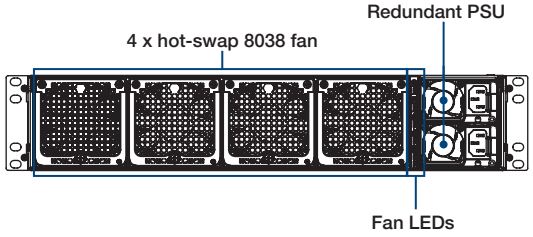

Ordering Information

Part Number	Processor	DDR5	PCH	QAT	NMC Slot	PCIe Slot	Storage Bay	USB3.0	IPMI Port	Console Port	LAN Port			System Fan	PSU
											1G RJ45	1G SFP	10G SFP+		
FWA-6173-00A1R	Dual socket for Intel® Xeon® 6 Processors	16	NA	By CPU SKU	8	2	2	2	1	1	2	0	0	4	2

Packing List

Part Number	Description	Quantity
1700020691-01	Console Cable D-SUB 9P(F)/RJ45-8P8C 220cm	1
1651003850-01	LGA 4710P E2B Carrier for HCC/LCC CPU	2
1651003851-01	LGA 4710P E2A Carrier for XCC CPU	2
1970005574T001	CPU Heat-sink, up to 350W	2
1960083584N021 1960083854T000	Mounting ear and handle	2

Optional Accessories

Part Number	Description
1702002600	Power cord 3P 180 cm, USA
1702002605	Power cord 3P 180 cm, Europe
1702031801	Power cord 3P 180 cm, UK
1700000237	Power cord 3P 180 cm, JP
1700009652	Power cord 3P 180 cm, China
1930008928	Screws for slide rail installation (Order 10 pieces per system)
968DE00026	Slide rail for post to post dimension 558.9 - 850.9mm
1700027334-01	USB for RJ45 console cable, 190cm

https://advavee.com