FWA-6170

2U Rackmount Network Appliance with Intel® Xeon® Processor Scalable Family, up to 8 NMC slots

Features

- 2 x Intel® Xeon® Scalable Processors Platinum 8100, Gold 6100 & 5100, Silver 4100 and Bronze 3100
- 24 x DDR4 2133/2400/2666 ECC registered memory up to 1536GB
- C626 PCH, 40Gb/s QAT support
- 8 x NMC (Network Mezzanine Card) slots for a wide range of GbE, 10GbE, 40GbE and 100GbE NMCs with or without Advanced LAN bypass. Optional support 4 x HDD kit (for 2.5" HDD) on the top NMC slots
- 2 x internal PCIe x8 slots support for low-profile add-on cards
- 2 x 2.5" removable external SATA HDDs/SSDs
- 2 x M.2 2280 SSD
- IPMI 2.0 compliant Remote Management

Specifications

System P/N		FWA-6170-00A1R	FWA-6170L-00A1R
Form Factor		2U - Rack Mount	2U - Rack Mount
Processor System	Processor	2 x Intel® Xeon® Scalable Processors Platinum 8100, Gold 6100 & 5100, Silver 4100 and Bronze 3100	
	Core Number	8C/10C/12C/14C/16C/18C/20C/22C/24C/26C/28C	
	Frequency	2.0GHz/2.1GHz/2.2GHz/2.3GHz/2.4GHz/2.6GHz/3.0GHz/3.2GHz/3.4GHz	
	L2 Cache	30MB ~ 75 MB	
	Chipset	C622 (without QAT)	C621 (without QAT)
	BIOS	AMI Efi 64Mbit	
Virtualization		VT-d	
Memory	Technology	DDR4, 2133/2400/2666MHz	
	Max. Capacity	1563GB (CPU0x12,CPU1x12)	
	Socket	24 x 288-pin RDIMM	
	ECC Support	Yes	
Networking	Controller	2 x Intel i210-AT	
	1GbE	2 x 10/100/1000 Mbps RJ45 via Intel i210-AT chip	
	10GE	2 x 10G SFP+ via Intel C622/C626	N/A
	LAN bypass	LBP support by NMC	
Expansion	PCIe x 8	2 x low-profile Gen3 x8 slot	
	NMC	8 NMCs	
Storage	2.5" HDD/SSD	Max. 2 x 2.5" HDD/SSD	
	m.2 SSD	2 x M.2 2280	
I/O	Console port	1	
	USB3.0	2	
	LED Indicator	1 x PWR_LED, 1 x Alert_LED, 1 x Locate_LED	
	Others	1 x power button	
	VGA	N/A	Yes
TPM		Modularized TPM 1.2 (TPM 2.0 optional)	
LCD Module		16 x 2 graphic display,5 buttons	
Power	Power Type	AC, redundant DC, redundant (optional)	
	Watts	850W	
	Input	100V ~ 240V	
	Connector	CRPS	
Environment	Operating Temperature (air flow 0.7 m/sec)	0 ~ 40 °C (32 ~ 104 °F)	
	Non-operating Temperature	-20 ~ 80° C (-4 ~ 167° F) and 40° C @ 95% RH Non-Condensing	
	Vibration Resistance	with SSD: 0.3 Grms, IEC 60068-2-64, 5-500Hz, 1hr/axis	
	Shock Protection	with SSD: 10G, IEC-60068-2-27, half sine, 11ms duration	
Cooling		6x system FAN with smart FAN	
Mechanical	Construction	Steel	
	Mounting	2U Rackmount	
	Dimensions (W x H x D)	438 x 88 x 684.15 mm (17.24 x 3.46 x 26.93 inch)	
	Weight	20 KG	
OS Support		Linux (CentOS, Red Hat, Ubuntu)	
Advantech S/W Packages		QuickStart Linux Image (CentOS based reference BSP) including ▪ afru ▪ ipmitool ▪ LCD4Linux ▪ Advanced LBP Utility ▪ Intel DPDK ▪ Intel QAT ▪ DUI (Offline Diagnostics) Individual packages: ▪ Advanced LBP Library ▪ DUI (Offline Diagnostics)	
IPMI		Carrier Grade BMC, IPMI v2.0 compliant, with web interface, iKVM on request (Advantech IPMI Core)	N/A
Certification		CE/FCC/CB/UL/CCC	

http://advantech.com

Dimensions

Unit: mm

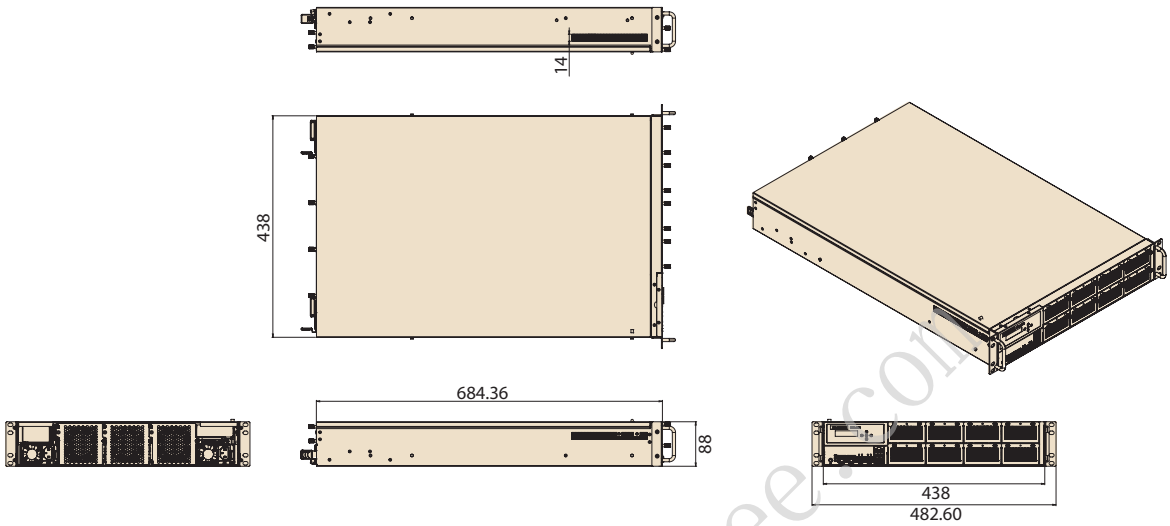

Front Panel External I/O Mechanical Layout/Drawing

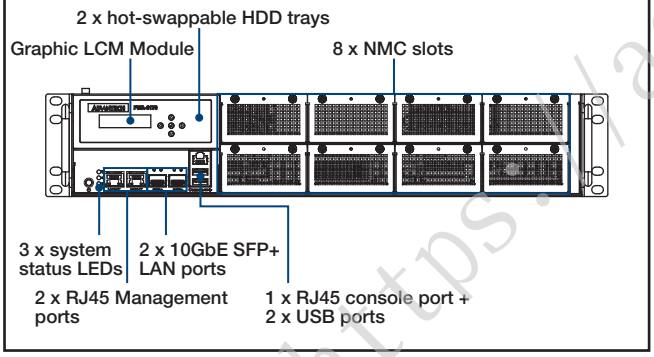

Rear Panel External I/O Mechanical Layout/Drawing

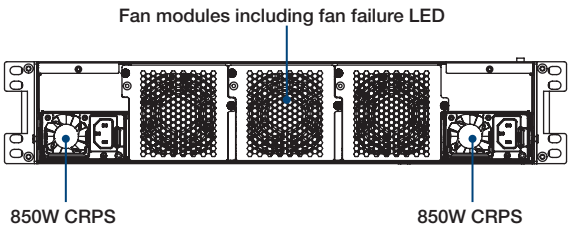

https://advavee.com

Ordering Information

Part No.	CPU	DDR4	PCH	QAT	PCIe slot	NMC slot	USB 3.0	MGMT port	10G SFP+	Console	BMC	LCM	VGA	PSU
FWA-6170-00A1R	2 sockets for Intel® Xeon® Scalable Processors	24	C622	No	2	8	2	2	2	1	Yes	1	N/A	850W AC
FWA-6170L-00A1R	2 sockets for Intel® Xeon® Scalable Processors	24	C621	No	2	8	2	2	N/A	1	N/A	1	Yes	850W AC

Packing List

Part Number	Description	Quantity
1700018950	Console cable D-SUB9P(F)/RJ45 220 cm	1
1651003167-01	LGA3647-0 narrow carrier	2

Optional Accessories

Part Number	Description
1702002600	Power cord 3P 180cm, USA
1702002605	Power cord 3P 180cm, Europe
1702031801	Power cord 3P 180cm, UK
1700000237	Power cord 3P 180cm, JP
1700009652	Power cord 3P 180cm, China
9692326040E	TPM 2.0
968DE00067	Slide rail
96PSRM-A1K2WCR	AC 1200W PSU (Recommend for 2 x 205W CPU + 4 x NVMe SSD condition)
XFWA-DPS800AB-14G	DC 800W PSU