# AIMC-2000

## Front Access Fan-less Micro Computer, Intel® Celeron® J1900 SoC with VGA/HDMI, 6 COMs, 8 USBs

## Features

- Intel® Baytrail Platform
  - Intel® Celeron® J1900 SoC
  - Fanless Design
- Compact & Rich I/O Configuration
  - One internal 2.5" SATA HDD bay & one mSATA slot for storage
  - VGA , HDMI, 2 GbE LAN, 7 USB 2.0, 1 USB 3.0, 5 RS-232, 1 RS-232/422/485
  - One mini PCIe expansion to support full size module
  - Line in , Line out with 6W amplifier
- Energy Savings
  - DC 12V power input

## Specifications

| | | | |
|---|---|---|---|
| Processor System | CPU | Intel J1900 | |
| | Core | 4 | |
| | Base Frequency | 2.0 GHz | |
| | L2 Cache | 2 MB | |
| | BIOS | AMI 64Mb SPI Flash | |
| Memory | Technology | Dual Channel DDR3L 1333/1066 MHz (Non ECC) | |
| | Max. Capacity | 8 GB (4 GB per SO-DIMM) | |
| | Socket | 2 x 204-pin SODIMM | |
| Graphics | Chipset Integrated | Integrated Intel HD Graphics | |
| Expansion slot | mini PCIe | 1, full size | |
| Ethernet | Interface | 10/100/1000 Mbps | |
| | Controller | 2 x Realtek 8119I | |
| Drive bay | 2.5" HDD (internal) | 1 | |
| | mSATA | 1 | |
| I/O Interface | Display | VGA , HDMI | |
| | USB | 7 USB 2.0, 1 USB 3.0 | |
| | Serial | 1 RS-232/422/485, 5 RS-232 | |
| | PS/2 | 1, KB/MS | |
| | Audio | Line in, Line out with 6W amplifier | |
| | DC jack | 1, Phoenix 2 pin | |
| Power Supply | Connector Type | Phoenix 2 pin connector | |
| | Input Voltage | DC 12V | |
| | Power consumption | Typical: 8.27W<br>Max: 16.39W | |
| Miscellaneous | LED Indicators | HDD | |
| | Control | Power on/off switch | |
| Environment | | Operating | Non-operating |
| | Temperature | -20 ~ 60° C (mSATA); 0 ~40° C (HDD) | -40 ~ 85° C |
| | Humidity | 95% @ 40° C, non-condensing | 95% @ 60° C, non-condensing |
| | Vibration | 1Grms, random, 5~500Hz, 3 axes, 1 hr/axis (HDD)<br>3Grms,random,5-500Hz,3 axes,1hr/axis (mSATA) | 2G, sine, 5~500Hz, 3 axes, 1 hr/axis (HDD) |
| | Shock | 10G, half sine wave, 11 ms duration (HDD)<br>30G,half-sine wave,11ms duration (mSATA) | |
| | EMC | CE/FCC, CCC, BSMI | |
| | Safety | CCC, UL, BSMI | |
| Physical Characteristics | Dimension (W x H x D) | 200 x 69 x 200 mm | |
| | Weight | 1.8 kg (3.97 lbs) | |

https://advavee.com



All product specifications are subject to change without notice.

## Dimensions

Unit: mm [inch]

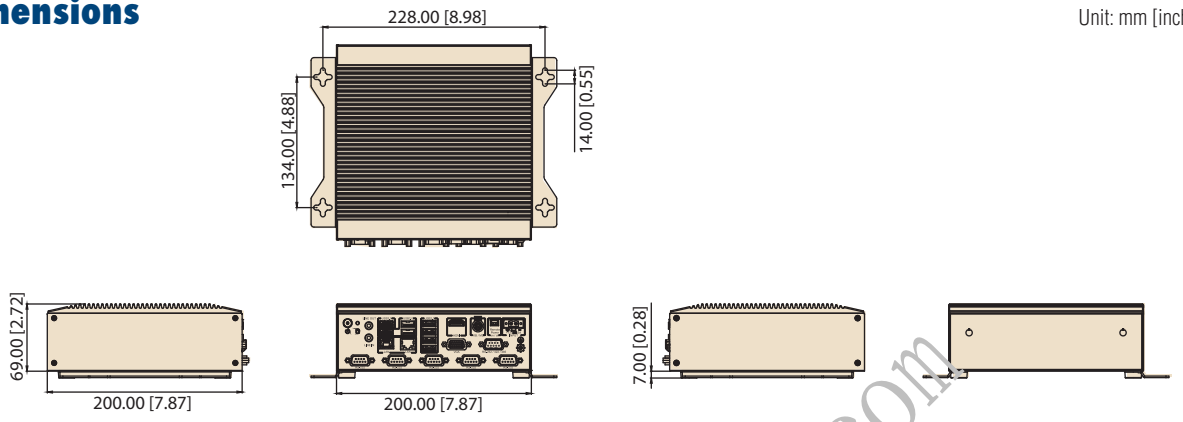


## Installation

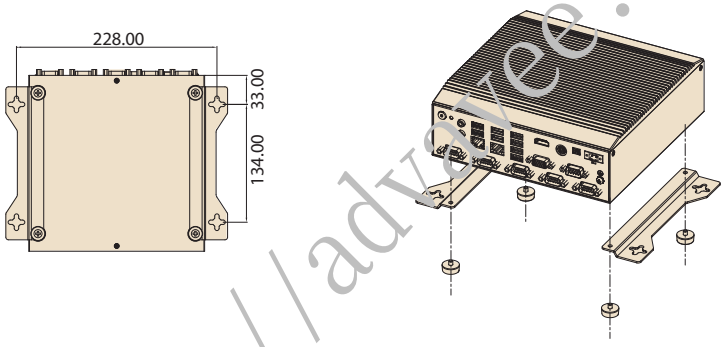


## Front View

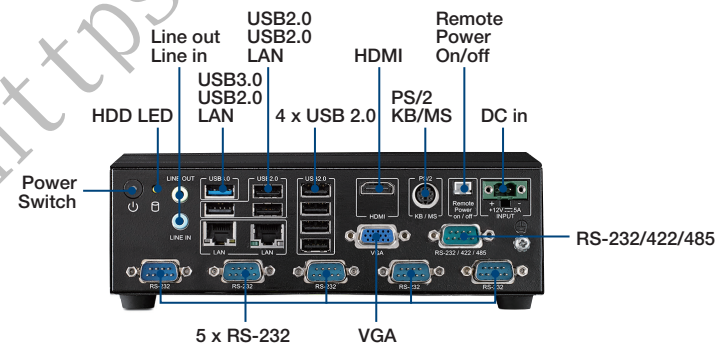


## Ordering Information

| Part No. | CPU | VGA | HDMI | SO-DIMM | USB 3.0/2.0 | GbE | COM | Mini PCIe |
|---|---|---|---|---|---|---|---|---|
| AIMC-2000J-00A2 | J1900 | 1 | 1 | 2 | 1/7 | 2 | 1 x RS-232/422/485<br>5 x RS-232 | 1 x full size |

## Optional Accessories

| Part Number | Description |
|---|---|
| 96PSA-A60W12P2-3 | Apater A/D 100-240V 60W 12V TERMINAL BLOCK 2PIN |

## Embedded OS

| Part Number | Description |
|---|---|
| 2070014040 | WES7P x64 10MUI |
| 2070014102 | WES7P x86 10MUI |
| 20706WX9ES0128 | WIN10 19EL x64 1809 ENG |
| 2070014613 | Ubuntu 12.04 |

https://advayee.com