AIIS-1440

USB3.0 CAM Compact System, Supports Intel® Core™ i7/i5/i3 CPU, 4-CH dedicated USB 3.0 controller

Features

- Intel® 3rd Core™ i7/i5/i3 CPU (LGA1155)
- 4-CH USB 3.0 with dedicated controller
  - Each channel compliant with SuperSpeed data rate (5 Gbps)
  - Compatible with USB 3.0 Cameras
- Compact & thoughtful design
  - Volume less than 3 Liter
  - Easier fan filter maintenance
  - Isolated Digital I/O
  - Internal USB Type-A with lock design (Max. 49mm length)
  - Wall or DIN rail mounting kit (optional)
  - Build in G-sensor for vibration detection

Thermal Optimized

Long Life Cycle

Specifications

Processor System	CPU	Core i7-3770	Core i3-3350S	Core i3-3220
	Core	4	4	2
	Base Frequency	3.4 GHz	3.0 GHz	3.3 GHz
	L3 Cache	8 MB	6 MB	3 MB
	Chipset	H61		
	BIOS	AMI 64Mb SPI Flash		
Memory	Technology	Dual Channel DDR3 1066/1333 MHz (Non ECC)		
	Max. Capacity	16 GB (8 GB per DIMM)		
	Socket	204-pin SO-DIMM x 2		
Graphics	Chipset Integrated	Integrated Intel HD Graphics		
USB3 (Dedicated controller)	Controller	CH1 ~ CH4: uPD720202		
	Compliant	USB 3.0		
	Power Output	4.5W per Channel		
Ethernet	Interface	10/100/1000 Mbps		
	Controller	LAN1: Intel 82579V, LAN2: Intel 82583V		
Storage	Internal 2.5" HDD Bay	1 (max. 9.5 mm height)		
	CFast			
Front I/O	Display	VGA + DVI-D		
	USB	4 USB3.0		
	Serial	2 (RS-232, RS-422 or RS-485 via BIOS setting; RS-485 with auto-flow control)		
	Isolated DIO	Default: 4 isolated DI and 4 isolated DO channels Optional module: 16 isolated DI and 16 isolated DO channels (AIIS-DIO32-00A1E) High-voltage isolation up to 2,500 V_{DC} on all channels Dry/wet contact support Supports 5 ~ 60 V_{DC} isolated input channels High-sink current for isolated output channels (100mA max./Channel) Interrupt handing & Timer/counter capability		
Rear I/O	USB	4 USB2.0		
	Serial	4 RS-232		
Watchdog Timer	Output	System reset		
	Interval	Programmable 1 ~ 255 sec/min		
Power Requirement	Power Type	ATX		
	Power Input Voltage	19 V_{DC} ~ 24 V_{DC}		
	Minimum Power Input	DC 19-24V @ 8-6.3A		
	Power Adapter	AC to DC, DC24V/9.16A, 220W (Optional)		
Cooling	System Fan	1 (6cm / 27.7 CFM)		
Miscellaneous	LED Indicators	Power, HDD, temperature		
	Control	Power on/off switch		
Environment		Operating	Non-operating	
	Temperature	0 ~ 45° C (32 ~ 113° F)*	-40 ~ 70° C (-40 ~ 158° F)	
	Humidity	10 ~ 95% @ 40° C, non-condensing	10 ~ 95% @ 60° C, non-condensing	
	Vibration	1Grms, random, 5~500Hz, 3 axes, 1 hr/axis	2G, sine wave, 5~500Hz, 3 axes, 1 hr/axis	
	Shock	10G, half sine wave, 11 ms duration		
Physical Characteristics	Dimension (W x H x D)	232 x 70 x 175 mm (9.06" x 2.76" x 6.89")		
	Weight	2.5 kg		

* Depend on CPU

https://advantech.com

All product specifications are subject to change without notice.

Dimensions

Unit: mm [inch]

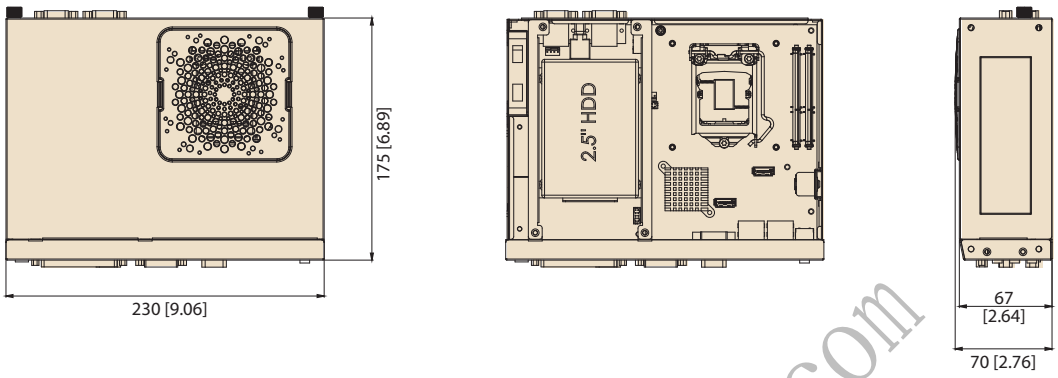

Front View

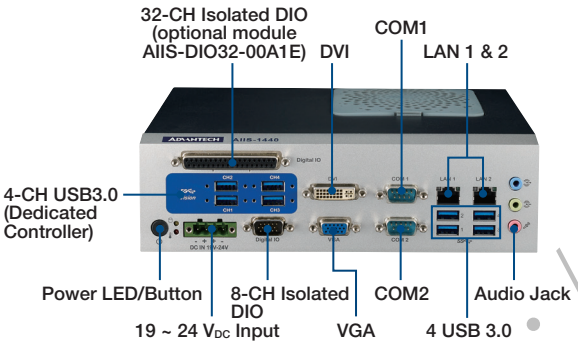

Internal View

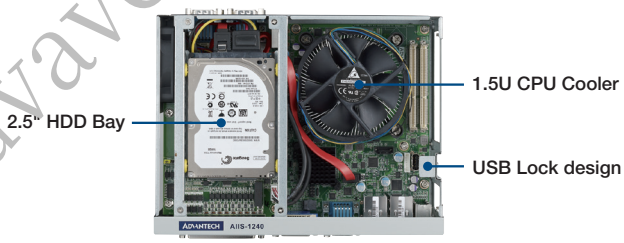

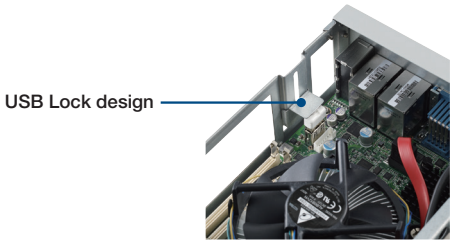

Rear View

Ordering Information

Part Number	Display	USB 3.0/2.0	Isolated DIO	COM 232/422/485	COM 232
AIIS-1440-00A1E	VGA+DVI-D	4* + 4 / 4	8-CH	2	4

* Dedicated controller per channel

Optional Accessories

Part Number	Description
98R2124000E	DIN-Rail Bracket
1700023217-01	M cable D-SUB 15P(F)/D-SUB 25(M) 1M AIIS-1240
ADAM-3925-AE	DB-25 Wiring Terminal, DIN-rail Mount
AIIS-DIO32-00A1E	Isolated DIO module, 32-CH, 9-pin USB interface
PCL-10137-1E	M Cable D-SUB 37P(M)/D-SUB 37P(M) 100CM
ADAM-3937-BE	DB-37 Wiring Terminal, DIN-rail Mount
96PSA-A220W24P4-1	220Watt DC24 Adapter
1702002600	Power cord 3-pin UL/CSA (USA) 125 V 10A 1.83 M 180D
1700022940-01	Power cord PSE 7A 125 V 3P 3 m DAC-ST01
1702002605	Power cord 2P (France) 10A/16A 220 V 1.83 M 90D

Note: If there is no 19~24V_{DC} source in your facility, this adapter is required to power on the system

Packing List

Items	Part Number	Quantity
AIIS-1440 Bare System	AIIS-1440-00A1E	1
Startup Manual	2006S12400	1
Driver CD	206K124000	1
Wallmount Bracket	1960014487T004	2
Rubber Foot	1990012452S000	4
CPU Cooler	1960060620N001	1
4-pin Phoenix DC power connector	1652003234	1

https://advavee.com