ULI-211C	**BB-FOSTCDR**
ULI-211CI	**BB-FOSTCDRI**
ULI-212CI	**BB-FOSTCDRI-ST**
ULI-213CI	**BB-FOSTCDRI-SC**
ULI-211E	**BB-FOSTCDRI-PH-MT**
ULI-213E	**BB-FOSTCDRI-PH-SC**

Serial to Fiber Optic Converters

Features

- Convert serial signals to single-mode or multi-mode fiber optic
- Data rate: up to 115.2 kbps
- 2 kV isolation protection on 2 or 3 lines (by model)
- Extend serial signals up to 15 km distance (by model)
- EMI/RFI protection – inherent to fiber optic communications
- Wide operating temperature range
- Modbus ASCII/RTU compatible
- External PSU required (not included, sold separately)
- DIN rail and panel mount options (by model)
- Industrial ratings (UL C1/D2, UL 508, IEC-61850-3, IEEE-1613) (by model)

Introduction

Advantech serial-to-fiber converters provide data signal extension, isolation plus fiber optic's inherent EMI/RFI immunity. Converters support point-to-point plus multi-drop allowing one serial device to communicate with up to 31 other devices in a fiber optic ring. ULI-21xCx models use Automatic Send Data Control circuitry for RS-422/485 driver control, eliminating software. A DIP switch sets RS-422/485 parameters; terminal blocks connect serial signals and power. ULI-21xE models use bit-wise enabled circuitry that automatically detects data rates without a DIP switch and also meet electrical substation requirements.

Specifications

Serial Technology

- **Industrial Bus** Modbus ASCII/RTU (all models)
- **Serial Connector** Terminal block (all models)

Model:	Data Rate (max):	Modes:	Biasing:	Termination:	LEDs:
ULI-211C	232: 115.2kbps 422/485: 460.8kbps	RS-232, RS-422, RS485 2w & 4w	–	–	Serial TD, RD Power
ULI-211CI	115.2 kbps		Built-in, switchable 1.2kΩ XMT/RCV	Built-in, switchable 120Ω	Fiber TD, RD Power
ULI-212CI			–	–	
ULI-213CI					
ULI-211E			Built-in, switchable 2kΩ XMT/RCV	Built-in, switchable 120Ω	Fiber TD, RD Serial Power
ULI-213E					

Isolation & Surge Protections

Model:	Optical Isolation:	Isolated Lines:	Surge Suppression:	Clamping Time:	Biasing	Termination
ULI-211C	2 kV	Input, output	–	–	Built-in, switchable 1.2kΩ XMT/RCV	Built-in, switchable 120Ω
ULI-211CI		Input, output, power	600 W	<1 pico-sec.	–	–
ULI-212CI						
ULI-213CI						
ULI-211E					Built-in, switchable 1.2kΩ XMT/RCV	Built-in, switchable 120Ω
ULI-213E						

Fiber Optic Technology

Model:	Mode/ Connector:	Type / Wavelength:	Output Power dBm, min/max:	Receive Sensitivity:	Cable, µM:	Data Rate:	Distance, max.:	Idle State:
ULI-211C	MM-ST	Multi-mode 820 nm	-17 to -10	-25.4 to -24 dBm	62.5/125	9.6 to 115.2 kbps	4 km	Transmitter light ON
ULI-211CI			-16 to -9					
ULI-212CI	SM-ST	Single-mode 1310 nm	-15 to -8	± -32 dBm	9/125		15 km	–
ULI-213CI	SM-SC							
ULI-211E	MM-ST	Multi-mode 1310 nm	-19 to -14	≤ -32 dBm	62.5/125		2 km	
ULI-213E	SM-SC	Single-mode 1310 nm	-15 to -8		9 /125		15 km	

Power

Model:	Source:	Connector:	Input:	Consumption:
ULI-211C	External PSU*	Terminal block	10-30 Vdc	1.7 W
ULI-211CI			10-48 Vdc	0.5W (1.3W with termination)
ULI-212CI				1.4 W
ULI-213CI				
ULI-211E				0.9W (2.6W with termination)
ULI-213E				

*External power supply required, not included, sold separately.

Mechanical

Model:	Enclosure:	Dimensions, mm:	Mounting:	Weight, gm:
ULI-211C	Plastic	106 x 79 x 25	DIN rail	182
ULI-211CI	IP20 plastic	123 x 113 x 32		200
ULI-212CI	IP30 plastic	128 x 97 x 28		150
ULI-213CI				
ULI-211E	IP30 metal	132 x 93 x 30	Panel	209
ULI-213E				

Environmental

Model:	Operating Temperature:	Storage Temperature:	Operating Humidity:
ULI-211C	-40 to +80 °C	-40 to +85 °C	0 to 95%, non-condensing
ULI-211CI			
ULI-212CI			
ULI-213CI			
ULI-211E	-40 to +85 °C		
ULI-213E			

Meantime Between Failures (MTBF)

- **Calculation Method** MIL217F Parts Count Reliability Prediction

Model:	Hours:
ULI-211C	2187303
ULI-211CI	138904
ULI-212CI	671969
ULI-213CI	
ULI-211E	127103
ULI-213E	

All product specifications are subject to change without notice.

Last updated: 28.Sept.2023

https://advatee.com

Dimensions - ULI-211C

Unit = mm/in

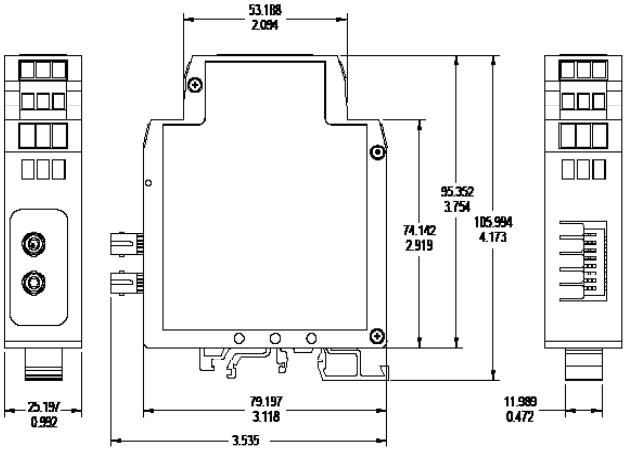

Dimensions - ULI-211CI

Unit = mm/in

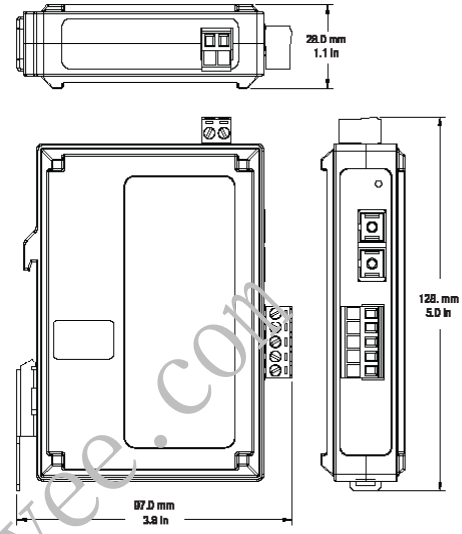

Dimensions - ULI-213CI

Unit = mm/in

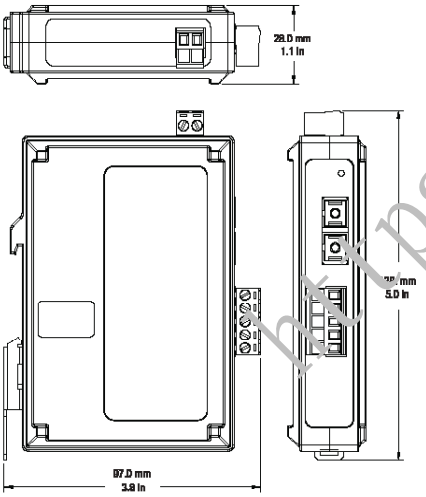

Dimensions - ULI-211E, ULI-213E

Unit = mm/in

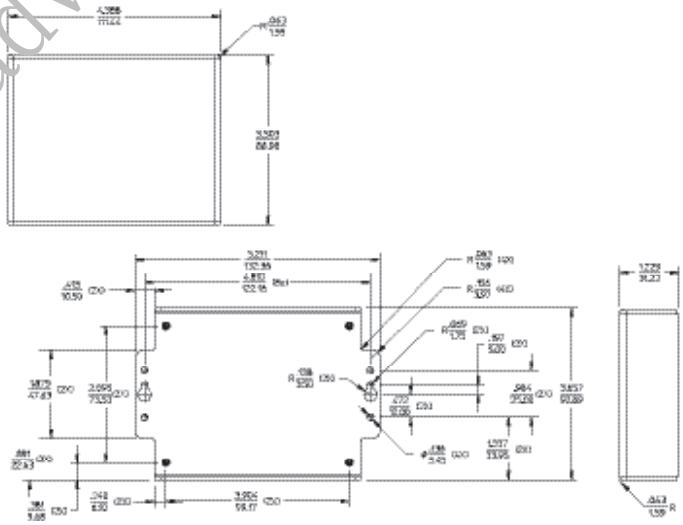

https://advavee.com

Ordering Information

Model	Part Number to Order	Description
ULI-211C	BB-FOSTCDR	Serial to Fiber Optic Converter – TB to MM Fiber ST, Ind. DIN Rail. *PSU not included; order separately.*
ULI-211CI	BB-FOSTCDRI	Serial to Fiber Optic Converter – TB to MM Fiber ST, Ind. DIN Rail, UL C1/D2. *PSU not included; order separately.*
ULI-212CI	BB-FOSTCDRI-ST	Serial to Fiber Optic Converter – TB to SM Fiber ST, Ind. DIN Rail. *PSU not included; order separately.*
ULI-213CI	BB-FOSTCDRI-SC	Serial to Fiber Optic Converter – TB to SM Fiber SC, Ind. DIN Rail. *PSU not included; order separately.*
ULI-211E	BB-FOSTCDRI-PH-MT	Serial to Fiber Optic Converter – TB to MM Fiber ST, Ind. Panel, UL C1/D2. *PSU not included; order separately.*
ULI-213E	BB-FOSTCDR-PH-SC	Serial to Fiber Optic Converter – TB to SM Fiber SC, Ind. Panel, UL C1/D2, IEC61850-3, IEEE-1613. *PSU not included; order separately.*

ULI-210 Series Selection Guide

Serial to Fiber Optic Converters

Serial to Fiber Converters Comparison Table

Model Number	ULI-211C	ULI-211CI	ULI-212CI	ULI-213CI	ULI-211E	ULI-213E
Part Number to Order	BB-FOSTCDR	BB-FOSTCDRI	BB-FOSTCDRI-ST	BB-FOSTCDRI-SC	BB-FOSTCDRI-PH-MT	BB-FOSTCDRI-PH-SC
Description	**2-way Isolated Serial/Fiber Converter**	**3-way Isolated Serial/Fiber Converters**			**3-way Isolated Serial/Fiber Converters**	
Key Features	Up to 460.8 kbps serial baud rate	UL 508, UL C1/D2	Up to 15 km data extension range, Switchable termination & biasing		UL C1/D2, IEC61850-3, IEEE-1613, Power utility substation applications	
Optical Isolation	2 kV, input/output	2 kV, input/output/power				
Surge Protection	–	600 W				
Serial Connector	Terminal block					
Serial Data Rate, max.	RS-232: 115.2 kbps RS-422/485: 460.8 kbps	RS-232/422/485: 115.2Kbps				
Fiber Connector	Multi-mode ST		Single-mode ST	Single-mode SC	Multi-mode ST	Single-mode SC
Fiber Type / Wavelength	Multi-mode, 820 nm		Single-mode, 1310 nm		Multi-mode, 1310 nm	Single-mode, 1310 nm
Fiber Output Power	-17 to -10 dBm	-16 to -9 dBm	-15 to -8 dBm		-19 to -14 dBm	-15 to -8 dBm
Receive Sensitivity	-25.4 to -24 dBm		± -32 dBm		≤ -32 dBm	
Fiber Cable	62.5/125 µM		9/125 µM		62.5/125 µM	9/125 µM
Fiber Data Rate, max.	115.2 kbps					
Fiber Distance	4 km		15 km		2 km	15 km
Industrial Bus	Modbus ASCII/RTU					
Power Source	External PSU					
Power Input	10-30 Vdc	10-48 Vdc				
Power Connector	Terminal block					
Operating Temperature	-40 to +80 °C				-40 to +85 °C	
Enclosure	Plastic	IP20 plastic	IP30 plastic		IP30 metal	
Dimensions	106 x 79 x 25 mm	123 x 113 x 32 mm	128 x 97 x 28 mm		132 x 93 x 30 mm	
Mounting Installation	DIN rail				Panel	
MTBF (MIL217F), hours	2187303	138904	671969		127103	
Regulatory/Approvals/ Certifications	FCC Part 15, CISPR, CE, KCC	FCC Part 15, CE, UL 508 #E222870, **UL C1/D2 #E245458**	FCC Part 15, CISPR, CE		FCC, CE, **UL C1/D2 #E245458, IEC61850-3, IEEE-1613**	
	2014/30/EU – Electro-magnetic Compatibility Directive (ECM) 2011/65/EU – Amended by (EU) 2015/863 Reduction of Hazardous Substances Directive (RoHS) 2012/19/EU – Waste Electrical and Electronic Equipment (WEEE)					
	EN 55032 Class B – Electro-magnetic Compatibility of Multi-media Equipment – Emission Requirements EN 55024 – Information Technology Equipment – Immunity Characteristics/Requirements EN 61000-6-1 – Generic Immunity Standards for Residential, Commercial & Light-industrial Environments				EN 55032 – Class A – Electro-magnetic Compatibility of Multi-media Equipment – Emission Requirements EN 55024 – Information Technology Equipment – Immunity Characteristics – Limits & Methods of Measurement EN 55011 +AC – Information Technology Equipment – Class A RF Emissions	
	–	EN 61000-6-3 +A1 – Generic Immunity Standards for Residential, Commercial & Light-industrial Environments (Class B)		EMC: EN 61000-6-2 – Generic Immunity Standard for (Heavy) Industrial Environments		

*UL C1/D2 #E245458 †IEC61850-3 ‡IEEE-1613

https://advavee.com